Centre Number	Candidate Number

Candidate Name _____

CAMBRIDGE INTERNATIONAL EXAMINATIONS

General Certificate of Education Advanced Level

PHYSICS 9702/5

PAPER 5 Practical Test

MAY/JUNE SESSION 2002

1 hour 30 minutes

Candidates answer on the question paper.
Additional materials:
As specified in Instructions to Supervisors
Graph paper

TIME 1 hour 30 minutes

INSTRUCTIONS TO CANDIDATES

Write your name, Centre number and candidate number in the spaces at the top of this page.

Answer **both** questions.

Write your answers in the spaces provided on the question paper.

You are expected to record all your observations as soon as these observations are made, and to plan the presentation of the records so that it is not necessary to make a fair copy of them. The working of the answers is to be handed in. Marks are mainly given for a clear record of the observations actually made, for their suitability and accuracy, and for the use made of them.

INFORMATION FOR CANDIDATES

Additional answer paper and graph paper should be submitted **only** if it becomes **necessary** to do so.
You are reminded of the need for good English and clear presentation in your answers.

FOR EXAMINER'S USE	
1	
2	
TOTAL	

This question paper consists of 6 printed pages and 2 lined pages.

(NH/CG) S14607/3
© CIE 2002

University of Cambridge Local Examinations Syndicate

[Turn over

It is recommended that you spend about 60 minutes on this question.

1 Decorative lights are sometimes wired in parallel. It is important to know how the current passing through the lights depends on the potential difference applied to them as the number of lights is changed. In this experiment you will investigate the variation of current with potential difference for two identical filament lamps and use the results of your experiment to suggest how current varies with potential difference for any number of identical lamps wired in parallel.

(a) Set up the circuit shown in Fig. 1.1 using the filament lamp labelled P.

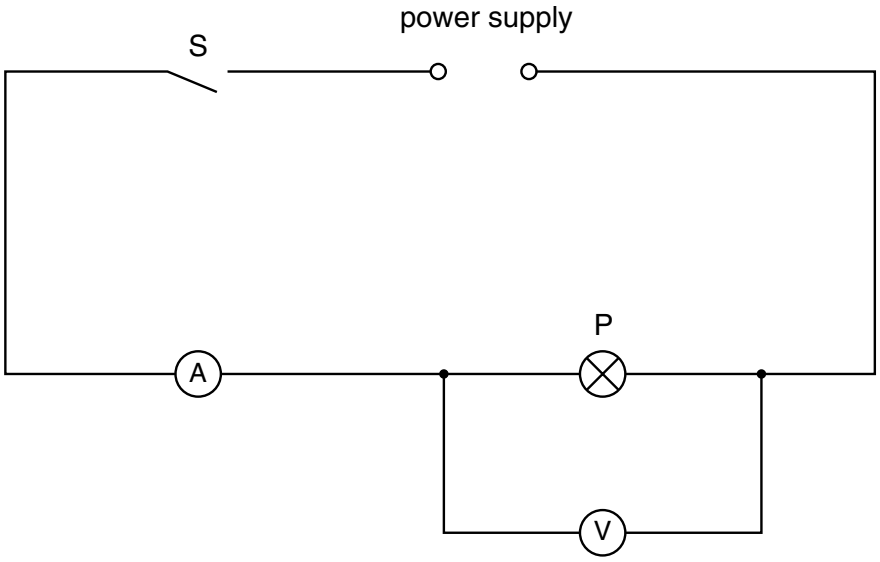

Fig. 1.1

(b) (i) Close switch S.

(ii) Measure and record six sets of readings of current I and potential difference V for I in the range 1.0 A ≤ I ≤ 2.0 A. Include in your table of results values for lg (I/A) and lg (V/V).

(iii) Open switch S.

(c) Connect the second filament lamp (labelled Q) in **parallel** with lamp P. Measure and record six sets of readings of I and V for I in the range 2.0 A ≤ I ≤ 4.0 A. Include in your table of results values for lg (I/A) and lg (V/V).

It is suggested that I and V are related by the equation

$$I = kV^n$$

where k and n are constants.

(d) (i) Plot a graph of lg (I/A) (y-axis) against lg (V/V) (x-axis) for the results obtained in parts **(b)** and **(c)**. Use the same axes for both sets of results. Draw the line of best fit for each set of results.

(ii) Determine the gradient and y-intercept of each of the lines of best fit.

(iii) Use your answers from **(ii)** to find values for n and k in each case. You need not be concerned with the units of these quantities.

(iv) Comment on the values of n and k which you have obtained.

(e) (i) What values would you expect to obtain for n and k if the experiment were repeated with three identical lamps connected in parallel?

(ii) Suggest an equation which describes the relationship between I and V for m identical lamps in parallel.

DO NOT WRITE IN THIS SPACE

[Turn over

Measurements and calculations

For Examiner's Use

M

R

A

Graph grid

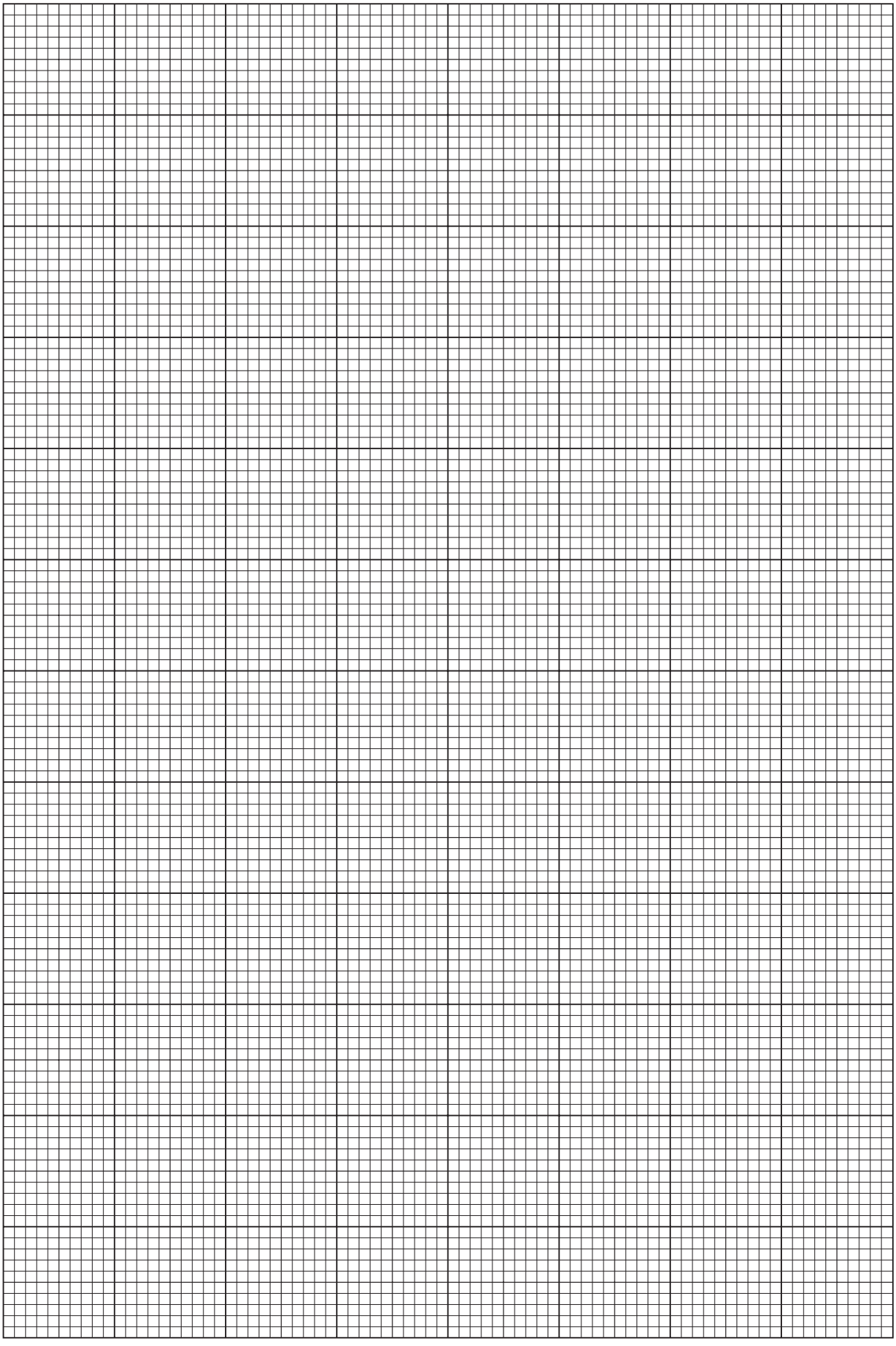

G

It is recommended that you spend about 30 minutes on this question.

2 The properties of many magnetic materials are affected by temperature. One effect is the loss of permanent magnetism when the temperature of a magnetic material exceeds a particular value. This temperature is known as the Curie point.

Design an experiment to investigate how the magnetic field strength of a magnet depends on the temperature of the magnet in the range from 0 °C to 200 °C.

In your account you should pay particular attention to

(a) the method of measuring the magnetic field strength (magnetic flux density),

(b) how the temperature of the magnet would be measured in the given range,

(c) the method of ensuring that the temperature of the magnet is uniform,

(d) the procedure to be followed,

(e) the control of variables.

.....

.....

.....

.....

.....

.....

.....

.....

.....

.....

.....

.....